RPsp typical application layout - Radio-controlled vers.

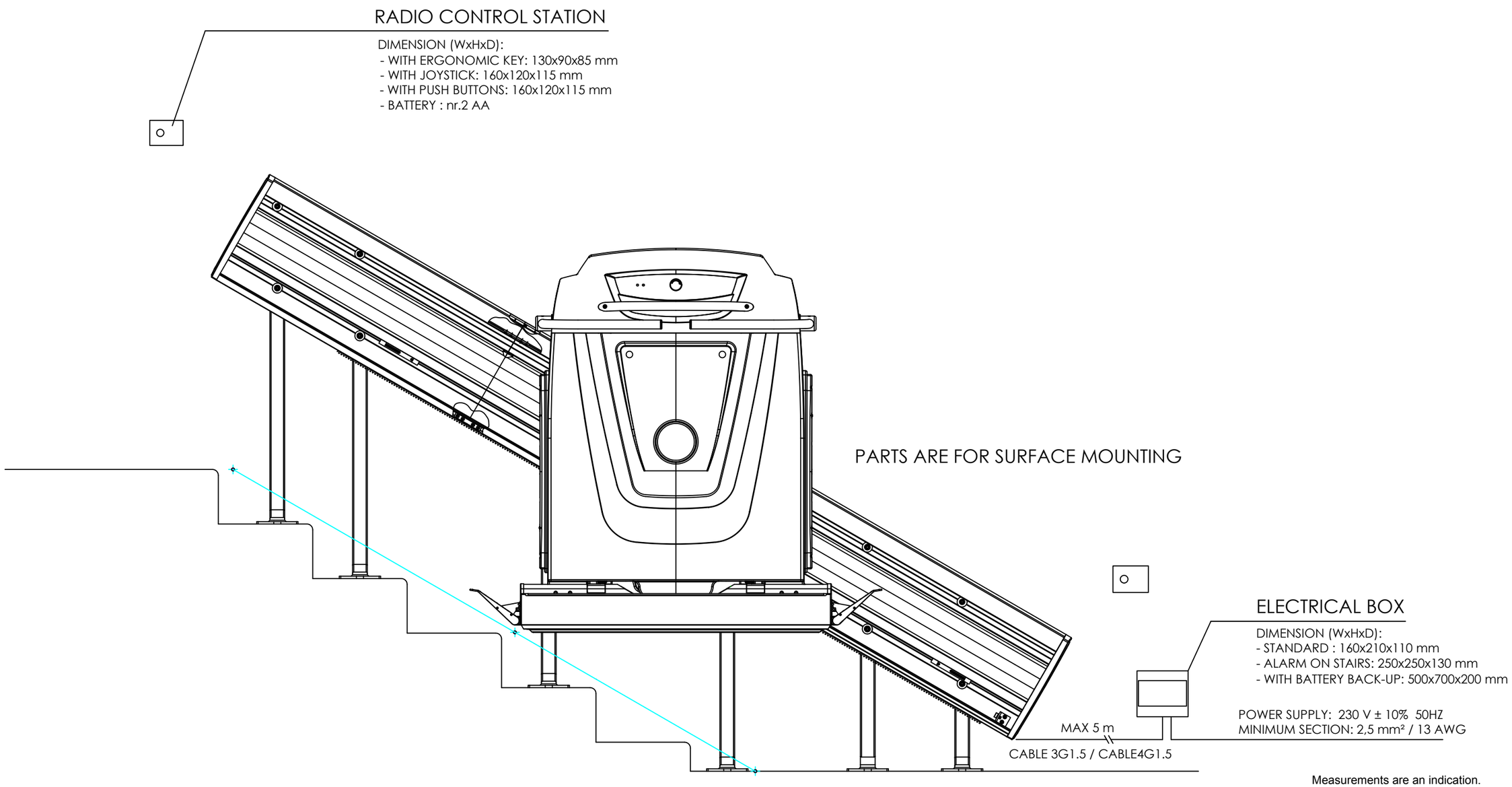

Measurements are an indication.
In order to check a machine feasibility, refer to our organizations.

Where not directly specified, measurements are in millimeters

Model :	RPsp MY2015
Machine Code :	SP06
Application / Version :	Standard config. - Radio-controlled v.
Drawing Reference :	00/33.001 Rev.02
Rev. :	00

ThyssenKrupp

ThyssenKrupp Encasa

RPsp typical application layout - Wired vers.

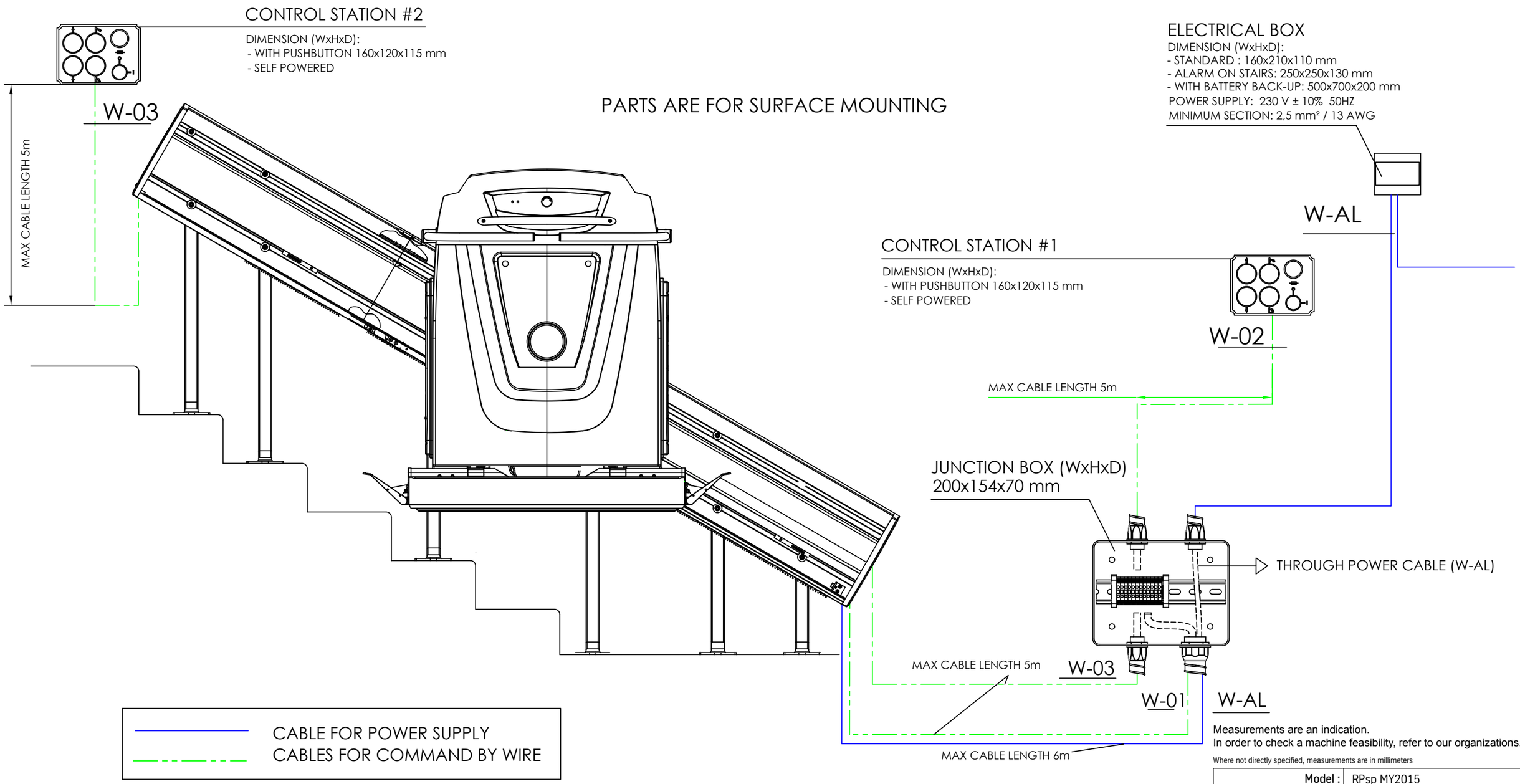

Measurements are an indication.
In order to check a machine feasibility, refer to our organizations.

Where not directly specified, measurements are in millimeters

Model :	RPsp MY2015
Machine Code :	SP06
Application / Version :	Wired version
Drawing Reference :	00/33.001 Rev.02
Rev. :	00

ThyssenKrupp

ThyssenKrupp Encasa

RPsp overall dimensions - Free height - Landing space - Rail overhang

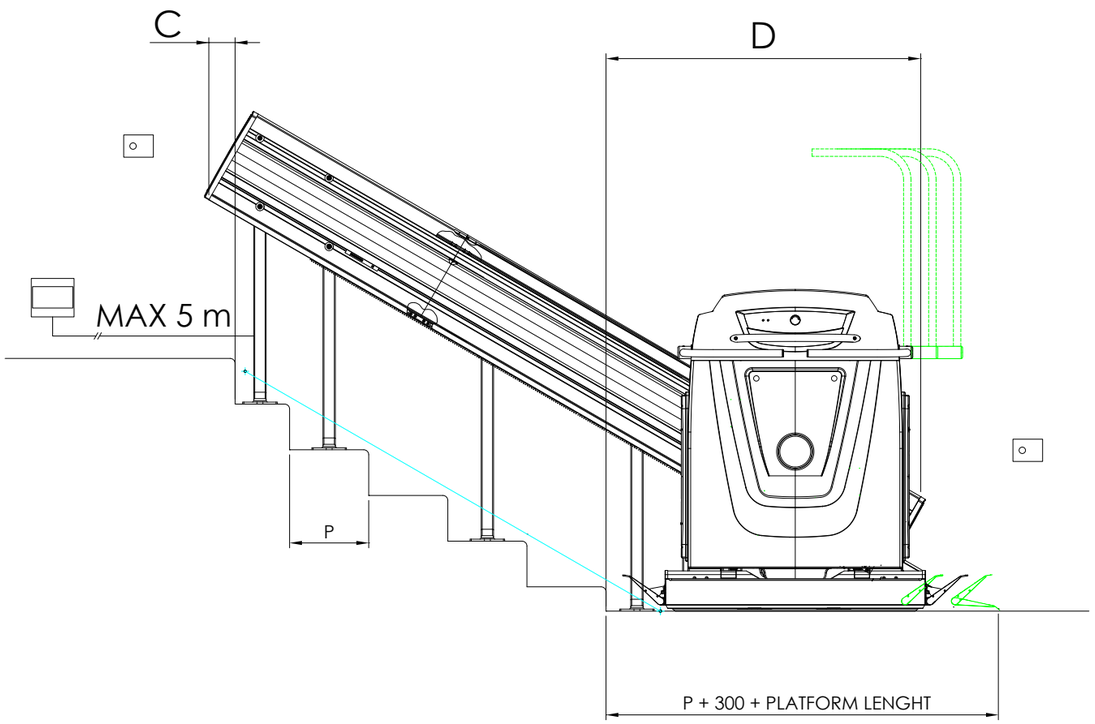

FRONT VIEW
RAIL OVERHANG (C) AND LANDING SPACE (D)

	PLATFORM LENGHT		
	850	1050	1250
ANGLE			
15°	C:40 D:1030+P	C:40 D:1120+P	C:40 D:1220+P
30°	C:140 D:1070+P	C:140 D:1160+P	C:140 D:1260+P
45°	C:220 D:1070+P	C:220 D:1160+P	C:220 D:1260+P

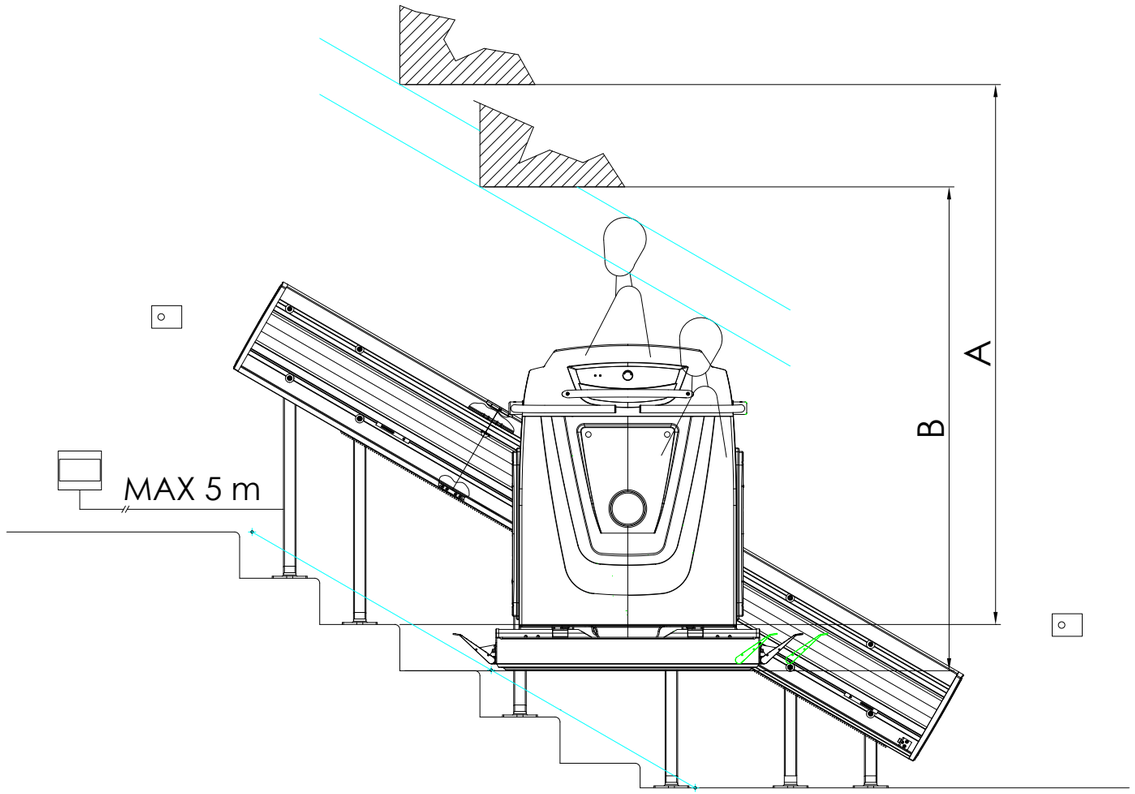

FRONT VIEW
FREE HEIGHT (A / B)

	PLATFORM LENGHT		
	850	1050	1250
ANGLE			
0°	A:1900 B:1500	A:1900 B:1500	A:1900 B:1500
5°	A:1950 B:1560	A:1950 B:1570	A:1960 B:1580
10°	A:1990 B:1620	A:2000 B:1630	A:2020 B:1650
15°	A:2020 B:1690	A:2050 B:1700	A:2080 B:1730
20°	A:2070 B:1740	A:2100 B:1780	A:2140 B:1810
25°	A:2120 B:1810	A:2160 B:1850	A:2210 B:1900
30°	A:2170 B:1890	A:2220 B:1940	A:2280 B:2000
35°	A:2230 B:1970	A:2290 B:2030	A:2360 B:2130
40°	A:2290 B:2060	A:2370 B:2140	A:2460 B:2310
45°	A:2370 B: 2170	A:2470 B:2320	A:2570 B:2520

A: HEAD OF STANDING USER (HEIGHT 1.8 m)
B: HEAD OF SITTING USER (HEIGHT 1.4 m)

Measurements are an indication.
In order to check a machine feasibility, refer to our organizations.

Where not directly specified, measurements are in millimeters

Model :	RPsp MY2015
Machine Code :	SP06
Application / Version :	Free height - Land. space - Rail over.
Drawing Reference :	00/33.010 Rev.04
Rev. :	00

ThyssenKrupp

ThyssenKrupp Encasa

RPsp overall dimensions - Wall fixing

FOLDED PLATFORM - SIDE VIEW

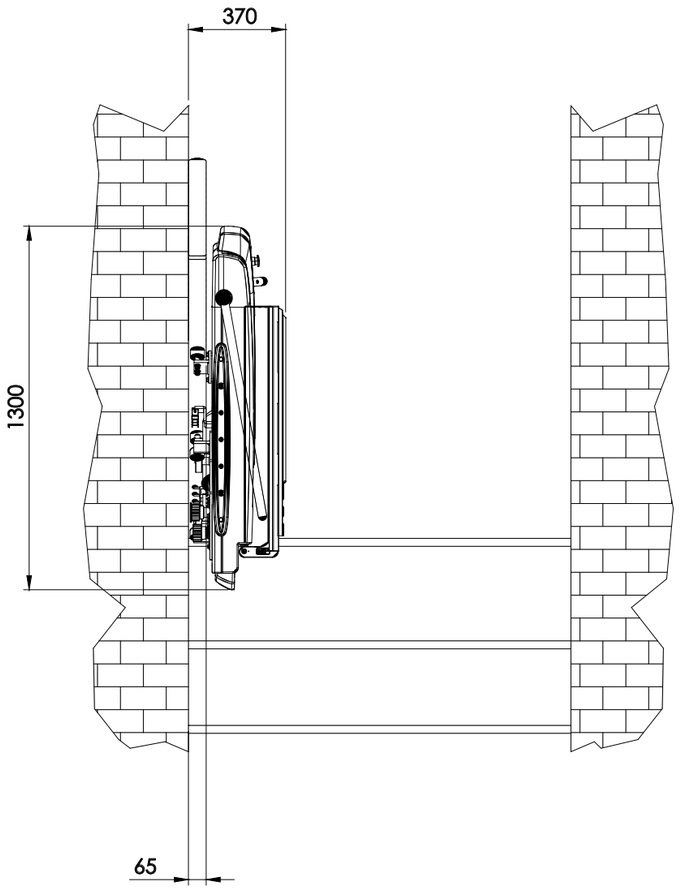

UNFOLDED PLATFORM - SIDE VIEW

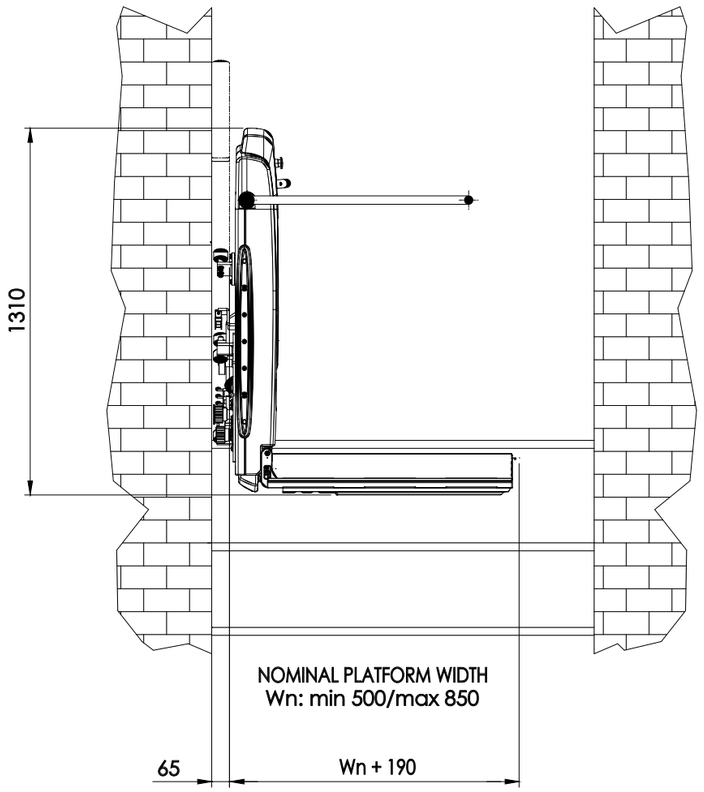

UNFOLDED PLATFORM SIDE VIEW
WITH LONG SIDE ACCESS

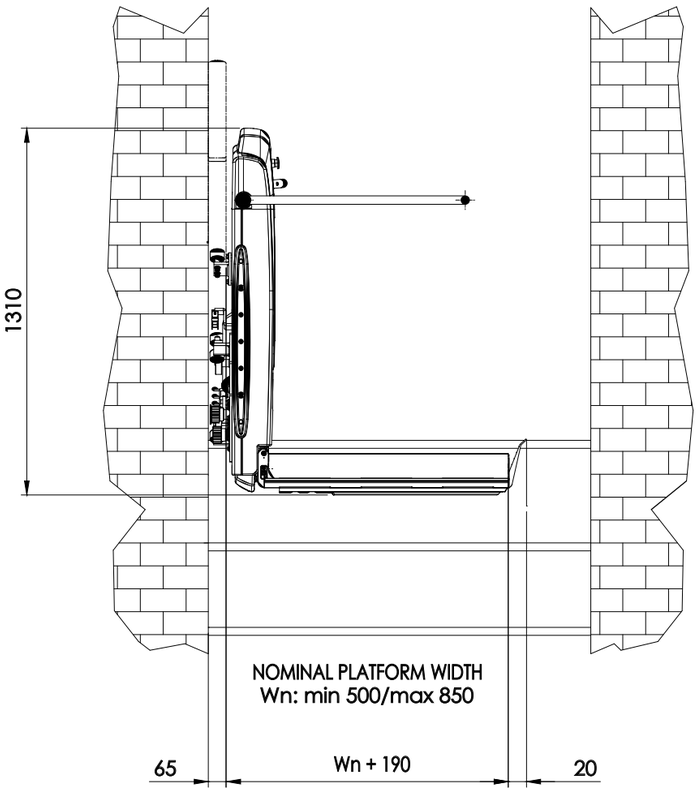

Measurements are an indication.
In order to check a machine feasibility, refer to our organizations.

Where not directly specified, measurements are in millimeters. Tollerances ±10

Model :	RPsp MY2015
Machine Code :	SP06
Application / Version :	Wall fixing
Drawing Reference :	-
Rev. :	00

ThyssenKrupp

ThyssenKrupp Encasa

RPsp overall dimensions - Light stanchions

FOLDED PLATFORM - SIDE VIEW

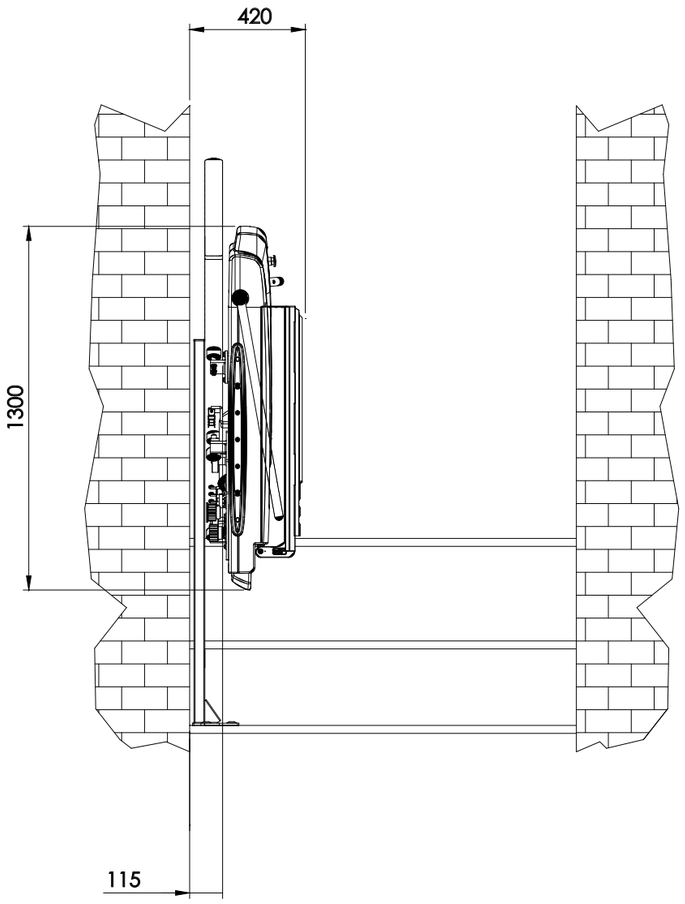

UNFOLDED PLATFORM - SIDE VIEW

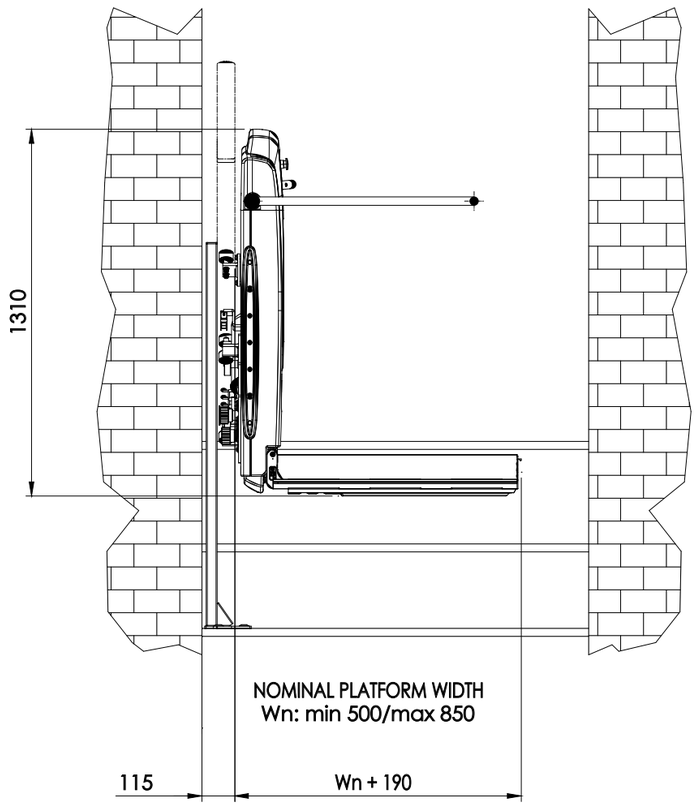

UNFOLDED PLATFORM SIDE VIEW
WITH LONG SIDE ACCESS

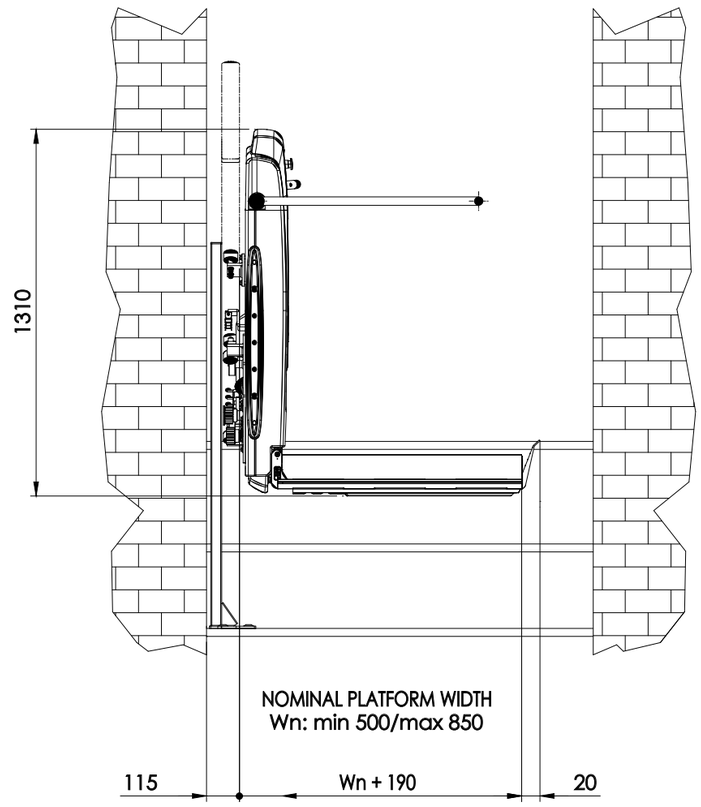

Measurements are an indication.
In order to check a machine feasibility, refer to our organizations.

Where not directly specified, measurements are in millimeters. Tollerances ±10

Model :	RPsp MY2015
Machine Code :	SP06
Application / Version :	Light stanchions - Free height
Drawing Reference :	-
Rev. :	00

ThyssenKrupp

ThyssenKrupp Encasa

RPsp overall dimensions - Heavy stanchions

FOLDED PLATFORM - SIDE VIEW

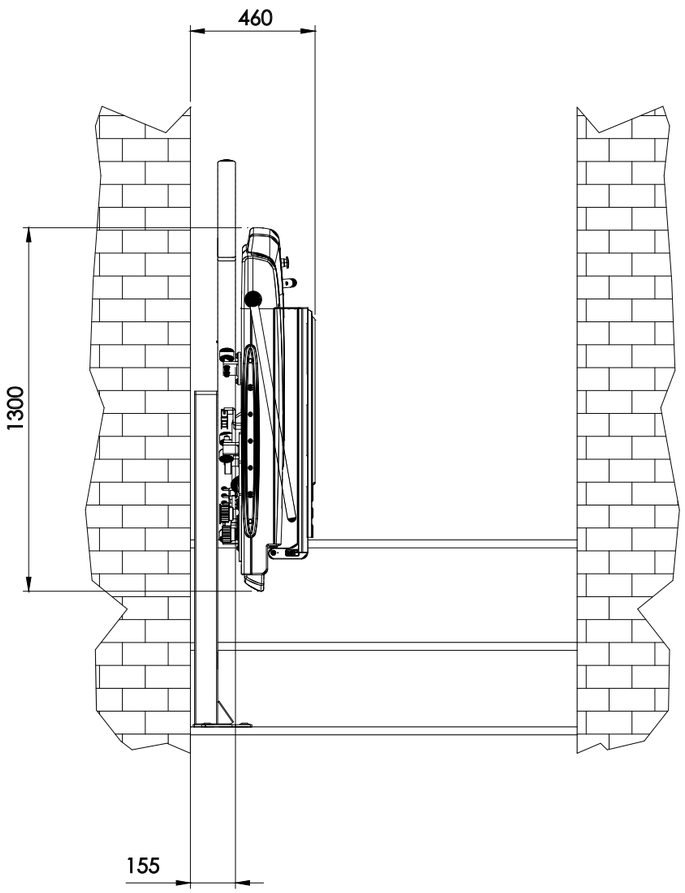

UNFOLDED PLATFORM - SIDE VIEW

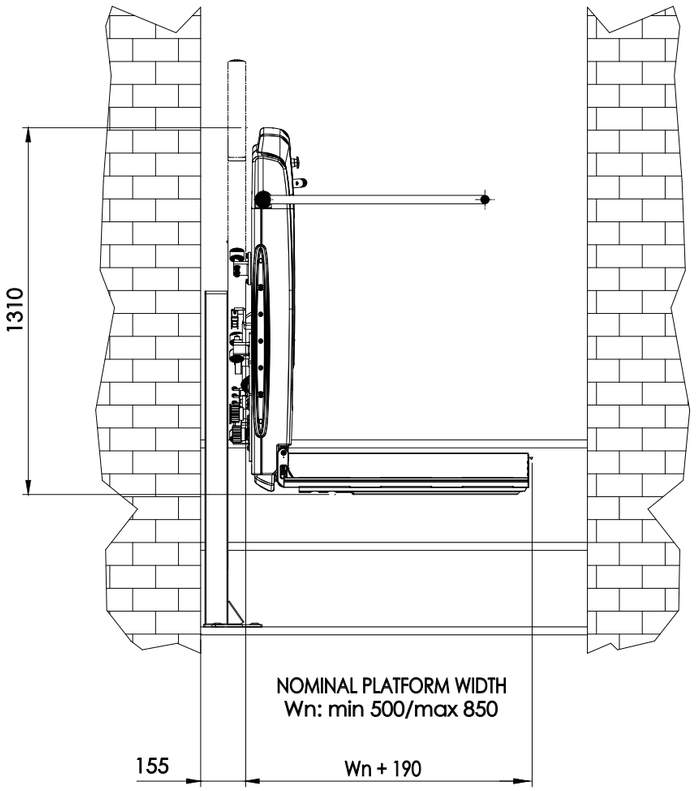

UNFOLDED PLATFORM SIDE VIEW
WITH LONG SIDE ACCESS

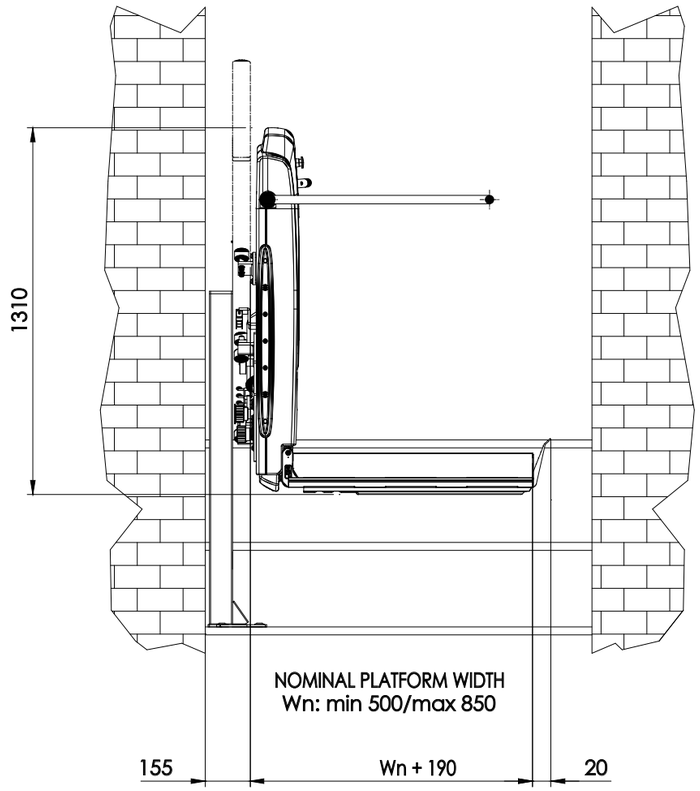

Measurements are an indication.
In order to check a machine feasibility, refer to our organizations.

Where not directly specified, measurements are in millimeters. Tollerances ±10

Model :	RPsp MY2015
Machine Code :	SP06
Application / Version :	Heavy stanchions - Side views
Drawing Reference :	-
Rev. :	00

ThyssenKrupp

ThyssenKrupp Encasa